Moxa Inc.
13F, No. 3, Sec. 4, New Taipei Blvd., Xinzhuang Dist.
New Taipei City 242032, Taiwan, R.O.C.
Tel: +886-2-8919-1230
Fax: +886-2-8522-8623
www.moxa.com

Product Discontinuance Notification—PDN# 0000450765

August 3, 2026

Dear Valued Customer,

The NPort Express Series (DE-211, DE-311) has been a trusted cornerstone of industrial connectivity for over a decade. However, this series will reach its End of Life (EOL) phase. To ensure your operations remain resilient in an era of evolving challenges, Moxa is starting a strategic migration to the NPort 6150-G2, effective July 01, 2026.

This transition is driven by two critical priorities:

1. Futureproof Cybersecurity Resilience: As global security standards intensify, legacy hardware faces inherent limitations in addressing modern cyberthreats. The NPort 6000-G2 is IEC 62443-4-2 Security Level 2 certified, providing the robust, hardware-level security required for today's mission-critical networks and performance that's ready for future upgrades. In addition,, an upgrade plan for the NPort 6000-G2 Series is underway for 2027 to comply with the EU Cyber Resilience Act (CRA).
2. Long-term Supply Sustainability: To uphold our commitment to long-term availability, we are migrating to new G2 platforms with more sustainable component life cycles. This move mitigates the risks associated with aging key components and ensures a stable supply for your future expansions.

The End of Service (EoS) date will be March 31, 2033. Following this date, all support services—including technical assistance, new software upgrades, and new security fixes—will no longer be available. Hardware warranty, repair, and replacement services remain subject to the standard warranty policy for these products.

What is the product discontinuation timeline?

Refer to the schedule below to plan your transition.

EOL Product	Last-time Buy Period Starts	Last-time Buy Period Ends	Last Shipment Date
DE-211	**July 01, 2026**	**March 31, 2027**	**September 30, 2027**
DE-311	**July 01, 2026**	**March 31, 2027**	**September 30, 2027**

Please review the details below to determine how this discontinuation will affect your products and/or operations.

Moxa Inc.
13F, No. 3, Sec. 4, New Taipei Blvd., Xinzhuang Dist.
New Taipei City 242032, Taiwan, R.O.C.
Tel: +886-2-8919-1230
Fax: +886-2-8522-8623
www.moxa.com

How will the discontinuation affect your operations?

Please refer to the successor model as a replacement.

The key aspects of migration from the NPort Express Series to the NPort 6150-G2 are dimensions, cables, and pin assignments.

- Please spare some extra height, width and depth for the NPort 6150-G2. Also, a new mounting option, side mounting, can be considered when appropriate.
- As the DB9/DB25 connector of the NPort Express Series is female, the cable should be replaced for the NPort 6150-G2's DB9 male connector.
- If the NPort Express Series is installed directly without a cable, update the pin assignments.

The following is the comparison table to support your transition process.

EOL Product	Specification	Successor Product	Specification
DE-211 	● Dimensions (with ears): 90.2 x 100.4 x 22 mm ● DB25 female connector	**NPort 6150-G2** 	● Dimensions (with ears): 93 x 111.8 x 25 mm ● DB9 male connector
Dimensions of the DE-211 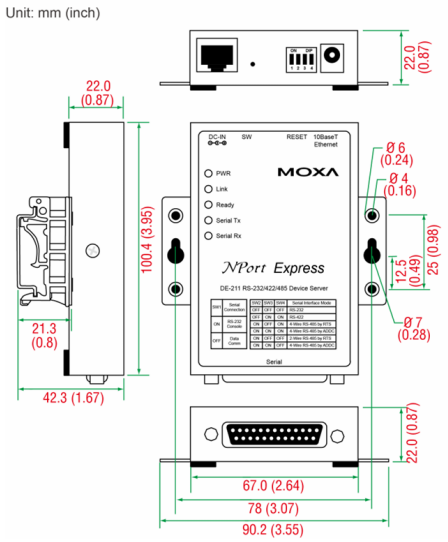		**Dimensions of NPort the 6150-G2** 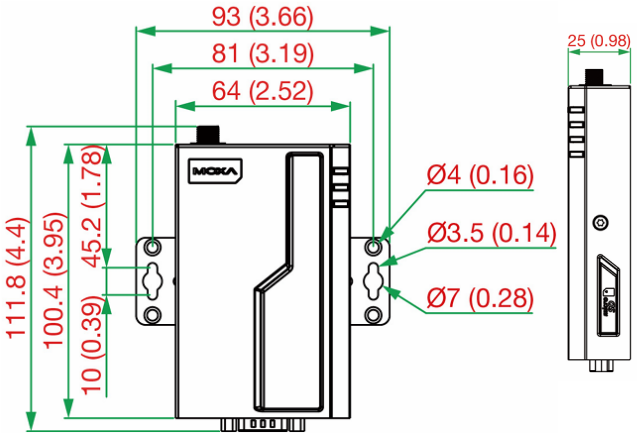	

Moxa Inc.
13F, No. 3, Sec. 4, New Taipei Blvd., Xinzhuang Dist.
New Taipei City 242032, Taiwan, R.O.C.
Tel: +886-2-8919-1230
Fax: +886-2-8522-8623
www.moxa.com

EOL Product	Specification	Successor Product	Specification

Pin Assignments for the DE-211

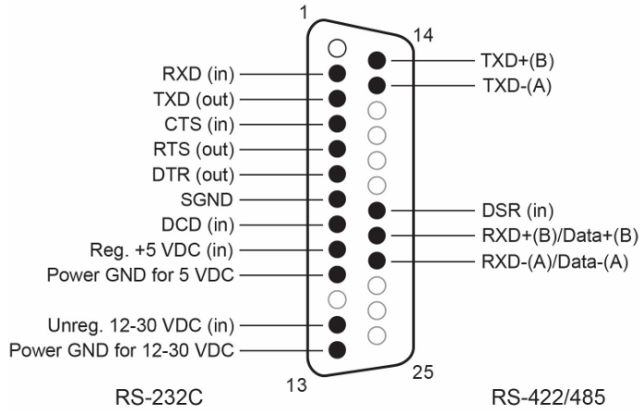

Pin Assignments for the NPort 6150-G2

Pin	RS-232	RS-422 4-wire RS-485	2-wire RS-485
1	DCD	TxD-(A)	–
2	RXD	TxD+(B)	–
3	TXD	RxD+(B)	Data+(B)
4	DTR	RxD-(A)	Data-(A)
5	GND	GND	GND
6	DSR	–	–
7	RTS	–	–
8	CTS	–	–
9	–	–	–

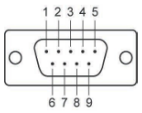

Four field serial device connection scenarios exist for the DE-211. Each scenario has a corresponding successor product combination that fully supports the migration.

Field Serial Device Connection Scenario	Corresponding New Product Combination
Scenario A: The field serial device transmits data via RS-422/485 and connects to the **DE-211** through an **NP21103** DB25-male-to-terminal-block adapter.	**Successor Product Combination:** **NPort 6150-G2** and **TB-F9** The field serial device continues to transmit data via RS-422/485 and connects to the **NPort 6150-G2** through a **TB-F9** DB9-female-to-terminal-block adapter.

Moxa Inc.
13F, No. 3, Sec. 4, New Taipei Blvd., Xinzhuang Dist.
New Taipei City 242032, Taiwan, R.O.C.
Tel: +886-2-8919-1230
Fax: +886-2-8522-8623
www.moxa.com

Field Serial Device Connection Scenario	Corresponding New Product Combination
	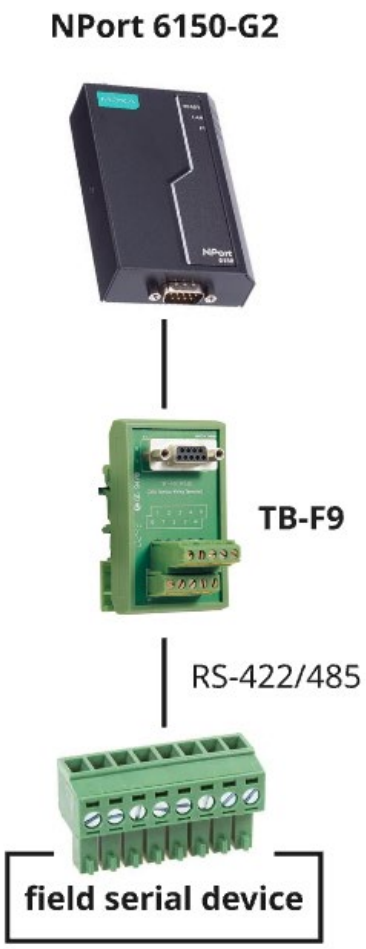

Moxa Inc.
13F, No. 3, Sec. 4, New Taipei Blvd., Xinzhuang Dist.
New Taipei City 242032, Taiwan, R.O.C.
Tel: +886-2-8919-1230
Fax: +886-2-8522-8623
www.moxa.com

Field Serial Device Connection Scenario	Corresponding New Product Combination
Scenario B: The field serial device transmits data via RS-232 and connects to the **DE-211** through an **NP21101** DB25-male-to-DB9-female cable. 	**Successor Product Combination:** **NPort 6150-G2** and **CBL-F9F9-BK-150** The field serial device continues to transmit data via RS-232 and connects to the **NPort 6150-G2** through a **CBL-F9F9-BK-150** DB9-female-to-DB9-female cable. 

Moxa Inc.
13F, No. 3, Sec. 4, New Taipei Blvd., Xinzhuang Dist.
New Taipei City 242032, Taiwan, R.O.C.
Tel: +886-2-8919-1230
Fax: +886-2-8522-8623
www.moxa.com

Field Serial Device Connection Scenario	Corresponding New Product Combination
Scenario C: The field serial device transmits data via RS-232 and connects to the **DE-211** through an **NP21102** DB25-male-to-DB9-male cable. 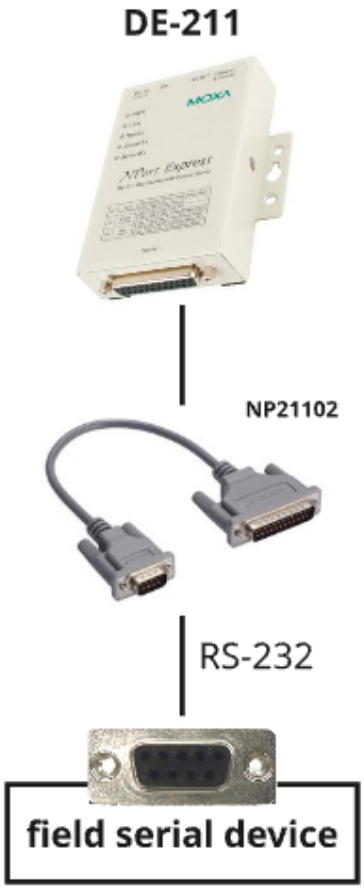	**Successor Product Combination:** **NPort 6150-G2**, **Mini DB9F-to-TB**, and**TB-M9** The field serial device continues to transmit data via RS-232 and connects to the **NPort 6150-G2** through a **TB-M9** DB9-male-to-terminal-block adapter and a **Mini DB9F-to-TB** DB9-female-to-terminal-block connector. 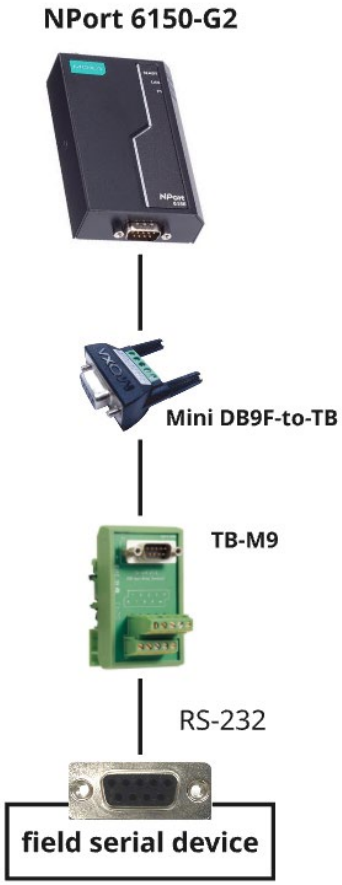

Moxa Inc.
13F, No. 3, Sec. 4, New Taipei Blvd., Xinzhuang Dist.
New Taipei City 242032, Taiwan, R.O.C.
Tel: +886-2-8919-1230
Fax: +886-2-8522-8623
www.moxa.com

Field Serial Device Connection Scenario	Corresponding New product combination
Scenario D: The field serial device connects directly to the **DE-211** via a DB25 male connector, without using an additional cable or adapter. 	**Successor Product Combination:** **NPort 6150-G2**, **Mini DB9F-to-TB**, and **TB-F25** The field serial device connects to the **NPort 6150-G2** through a **TB-F25** DB25-female-to-terminal-block adapter and a **Mini DB9F-to-TB** DB9-female-to-terminal-block connector. 

Moxa Inc.
13F, No. 3, Sec. 4, New Taipei Blvd., Xinzhuang Dist.
New Taipei City 242032, Taiwan, R.O.C.
Tel: +886-2-8919-1230
Fax: +886-2-8522-8623
www.moxa.com

EOL Product	Specification	Successor Product	Specification
DE-311 	• Dimensions (with ears): 90.2 x 100.4 x 22 mm • DB9 female connector	**NPort 6150-G2** 	• Dimensions (with ears): 93 x 111.8 x 25 mm • DB9 male connector

Dimensions of the DE-311

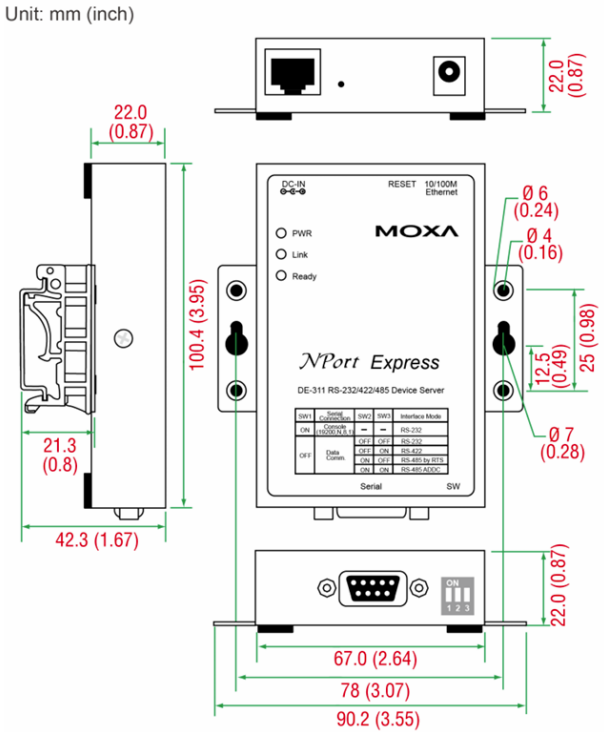

Dimensions of the NPort 6150-G2

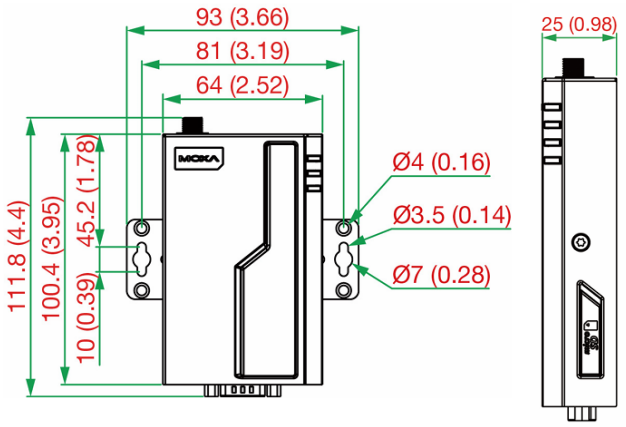

Pin Assignments for the DE-311

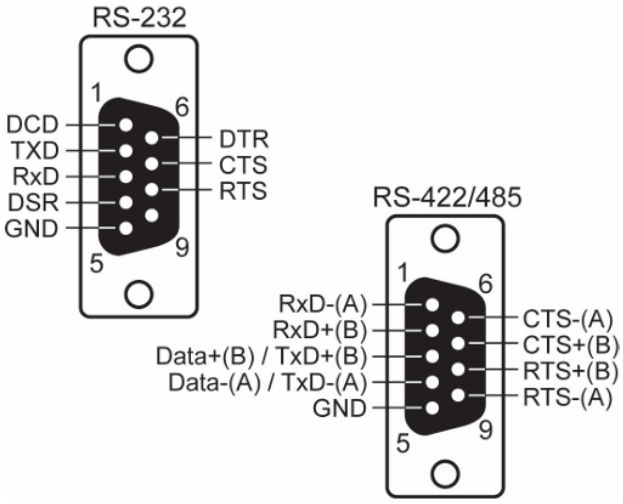

Pin Assignments for the NPort 6150-G2

Pin	RS-232	RS-422 4-wire RS-485	2-wire RS-485
1	DCD	TxD-(A)	–
2	RXD	TxD+(B)	–
3	TXD	RxD+(B)	Data+(B)
4	DTR	RxD-(A)	Data-(A)
5	GND	GND	GND
6	DSR	–	–
7	RTS	–	–
8	CTS	–	–
9	–	–	–

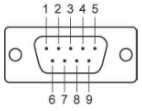

Moxa Inc.
13F, No. 3, Sec. 4, New Taipei Blvd., Xinzhuang Dist.
New Taipei City 242032, Taiwan, R.O.C.
Tel: +886-2-8919-1230
Fax: +886-2-8522-8623
www.moxa.com

Two field serial device connection scenarios exist for the DE-311. Each scenario has a corresponding successor product combination that fully supports the migration.

Field Serial Device Connection Scenario	Corresponding New Product Combination
Scenario A: The field serial device connects to the **DE-311** through either the **CBL-F9M9-150** or **CBL-F9M9-20** DB9-male-to-DB9-female cable. 	**Successor Product Combination:** **NPort 6150-G2**, **Mini DB9F-to-TB**, and **TB-F9** The field serial device connects to the **NPort 6150-G2** through a **TB-F9** DB9-female-to-terminal-block adapter and a **Mini DB9F-to-TB** DB9-female-to-terminal-block connector. 

Moxa Inc.
13F, No. 3, Sec. 4, New Taipei Blvd., Xinzhuang Dist.
New Taipei City 242032, Taiwan, R.O.C.
Tel: +886-2-8919-1230
Fax: +886-2-8522-8623
www.moxa.com

Field Serial Device Connection Scenario	Corresponding New product Combination
Scenario B: The field serial device transmits data via RS-232 and connects to the **DE-311** through the included DB9 male null-modem adapter. 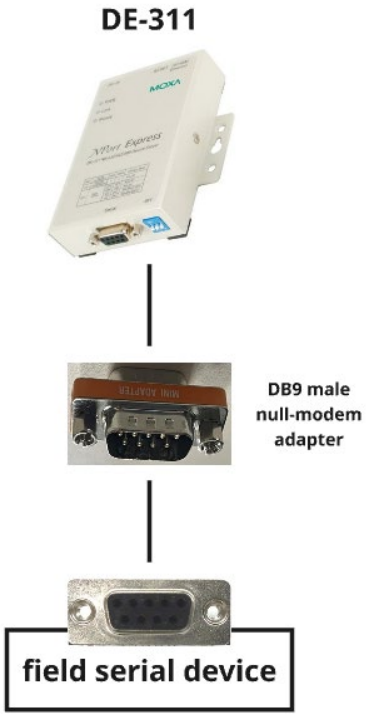	**Successor Product Combination:** **NPort 6150-G2**, **Mini DB9F-to-TB**, and **TB-M9** The field serial device connects to the **NPort 6150-G2** through a **TB-M9** DB9-male-to-terminal-block adapter and a **Mini DB9F-to-TB** DB9-female-to-terminal-block connector. 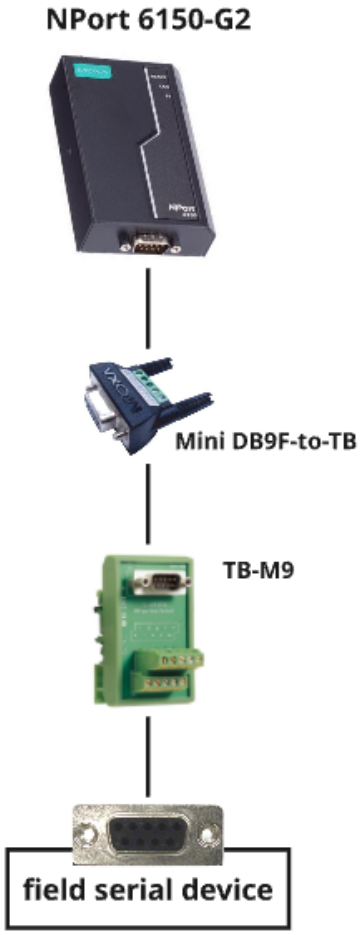

Moxa Inc.
13F, No. 3, Sec. 4, New Taipei Blvd., Xinzhuang Dist.
New Taipei City 242032, Taiwan, R.O.C.
Tel: +886-2-8919-1230
Fax: +886-2-8522-8623
www.moxa.com

What else should you consider during migration?

Besides dimensions, cables, and pin assignments, also review the following differences when migrating from the NPort Express Series to the NPort 6150-G2.

- **Power over Serial (PoS)**
  DE-211 supports power over serial (PoS), but the NPort 6150-G2 does not. If the existing field device relies on PoS, use an external power injector or an equivalent power solution.
- **Ethernet Modem Mode**
  DE-211 and DE-311 support Ethernet Modem Mode, which emulates modem behavior through an AT command set. This mode is not supported on the NPort 6150-G2.
- **Medical certification (EN 60601-1-2, EN 55011)**
  DE-311 is certified for EN 60601-1-2 and EN 55011, while the NPort 6150-G2 is not. If the existing application requires these medical certifications, please consider using the NPort 5450-G2 or NPort 5210-G2 as the successor option, which is scheduled to be available around Q1 2027.
- **Linux Real TTY driver**
  The NPort 6150-G2 supports Linux kernel versions 4.x, 5.x, and 6.x. For security and long-term support considerations, we recommend updating the host system to Linux kernel version 4.x or higher. If your application still requires a legacy Linux kernel version, contact Moxa for further support.
- **Windows Real COM driver**
  NPort 6150-G2 supports Windows 11, 10, 8.1, 8, and 7, Windows Server 2022, 2019, 2016, 2012R2, 2012, and 2008R2. For security and long-term support considerations, we recommend using a supported Windows version. If your application still requires a legacy Windows version, contact Moxa for further support

How should the NPort 6150-G2 configuration be handled during migration?

The following configuration steps provide general guidance for migrating to NPort 6150-G2. The actual configuration may vary depending on the original application design, operation mode, network settings, serial parameters, driver usage, and security requirements. For detailed configuration procedures and parameter definitions, refer to the NPort 6000-G2 Series User Manual.
https://www.moxa.com/en/support/product-support/software-and-documentation/search?psid=137659

1. Configure the NPort 6150-G2 based on the original NPort Express setup.
   - Complete the first-time setup and assign the IP address using Device Search Utility (DSU) v3.0 or later. You can also access the Web Console after the IP address has been configured.
   - Configure the network settings, operation mode, serial port settings, and secure connection settings according to the original application requirements.

- For the operation mode, select the proper application type based on how the host application communicates with the serial device, for example, COM-based Control, Socket, Pair Connection, Connect Console, or Connect Modem.
- For serial communication, make sure the serial port settings are aligned with the field serial device to maintain equivalent serial-port functionality.

2. For COM/TTY-based applications using Moxa drivers, remap the host COM/TTY port to the NPort 6150-G2.
   - For Windows COM-based applications, select COM-based Control and Real COM mode, then use NPort Windows Driver Manager to map the COM port to the NPort6150-G2.
   - Activate the mapped COM port after configuration. The host computer will not use the mapped COM port until it is activated.
   - For Linux/UNIX-like applications, map the fixed TTY port according to the corresponding driver setup process.
3. For TCP/UDP socket applications, configure the NPort 6150-G2 as a socket application.
   - Use TCP Server mode when the host application initiates the TCP session. In this mode, the NPort 6150-G2 listens on the assigned TCP data port and waits for the host application to establish the connection.
   - The default TCP data port is 4001. If the host application uses a different port number, update the NPort6150-G2 data port or the host application setting accordingly.
   - For TCP Client or UDP applications, select the corresponding socket mode and verify that the IP address, TCP/UDP port, and connection behavior match the host application design.
4. Verify functional compatibility after configuration.
   - Confirm that the host application can communicate with the field serial device through the NPort 6150-G2.
   - Verify the serial data flow, COM/TTY mapping or socket connection, IP address, TCP/UDP port, and serial-port behavior.
   - If encrypted communication is required, configure Secure Connection and verify whether the application requires an encrypted connection or an encrypted and authenticated connection.

If you have any questions, please contact your regional sales representative.